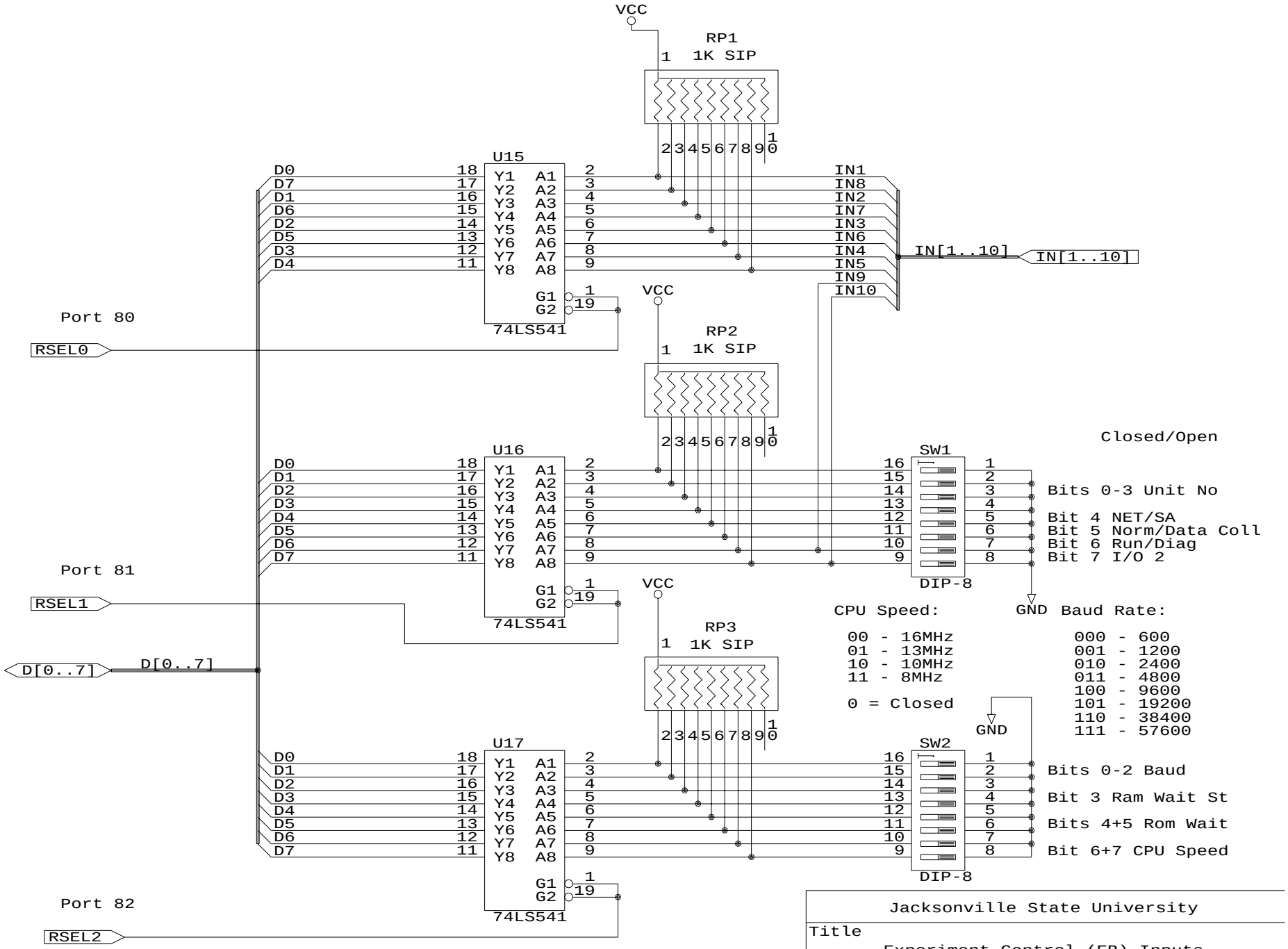

Jacksonville State University

Title
Experiment Control (EB) Inputs

Size	Document Number	REV
A		B

Date: March 29, 1993 Sheet 7 of 9